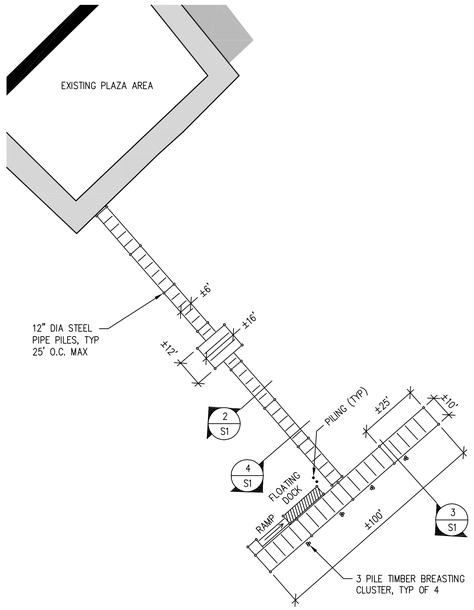

1 / S1 PROPOSED FLOATING DOCK AND WALKWAY
SCALE: 1/32" = 1'-0"

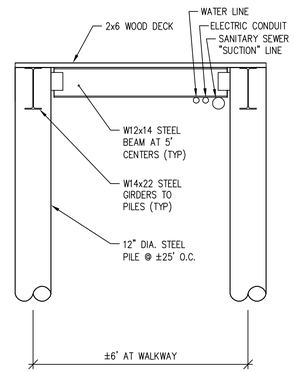

2 / S1 SECTION: TYPICAL WALKWAY FRAMING
SCALE: 1/2" = 1'-0"

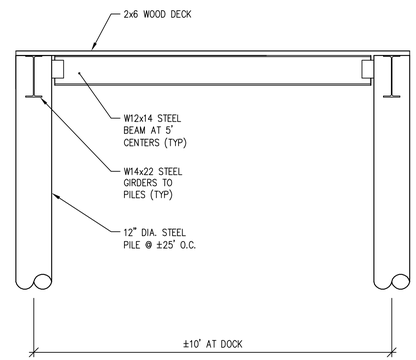

3 / S1 SECTION: TYPICAL DOCK FRAMING
SCALE: 1/2" = 1'-0"

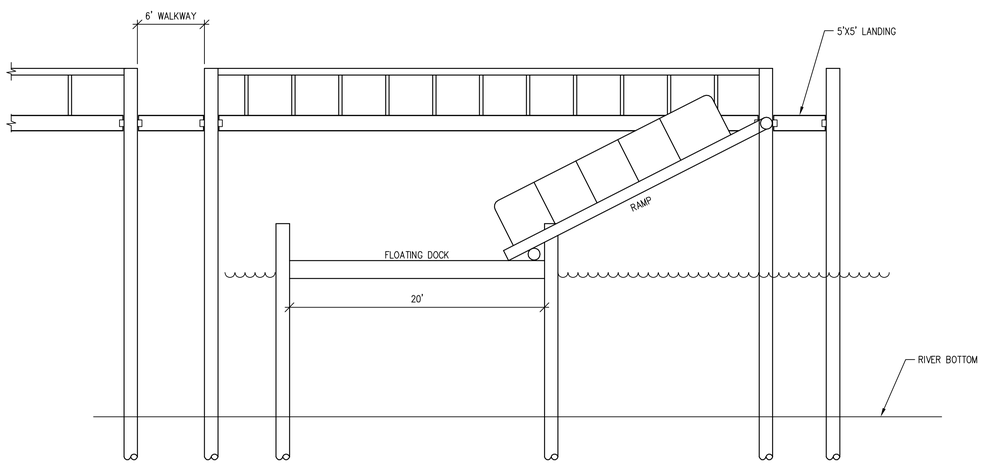

4 / S1 ELEVATION: FLOATING DOCK & RAMP
SCALE: 3/16" = 1'-0"

DUFFIELD ASSOCIATES
Consultants in the Geosciences
5400 LIMESTONE ROAD
WILMINGTON, DE 19808-1232
TEL (302)239-6634
FAX (302)239-8485
OFFICES IN DELAWARE, MARYLAND, PENNSYLVANIA AND NEW JERSEY
E-MAIL: DUFFIELD@DUFFNET.COM

CHECKED BY:
DESIGNED BY: SEH
DRAWN BY: SEH
FILE NAME: D9182CA-S1

No.	REVISION	CHK'D BY DATE
-		

OWNER:

PRELIMINARY DOCK AND WALKWAY FRAMING DETAILS

PROPOSED DOCK FACILITY

CITY OF NEW CASTLE–NEW CASTLE COUNTY–DELAWARE

DATE: 2 JANUARY 2014
SCALE: AS NOTED
PROJECT NO. 9182.CB
SHEET: 3 OF 3

N:\Projects\9000\9182\CAD\CB\D9182CB-S1.dwg, S-1, 1/14/2014 10:19:23 AM